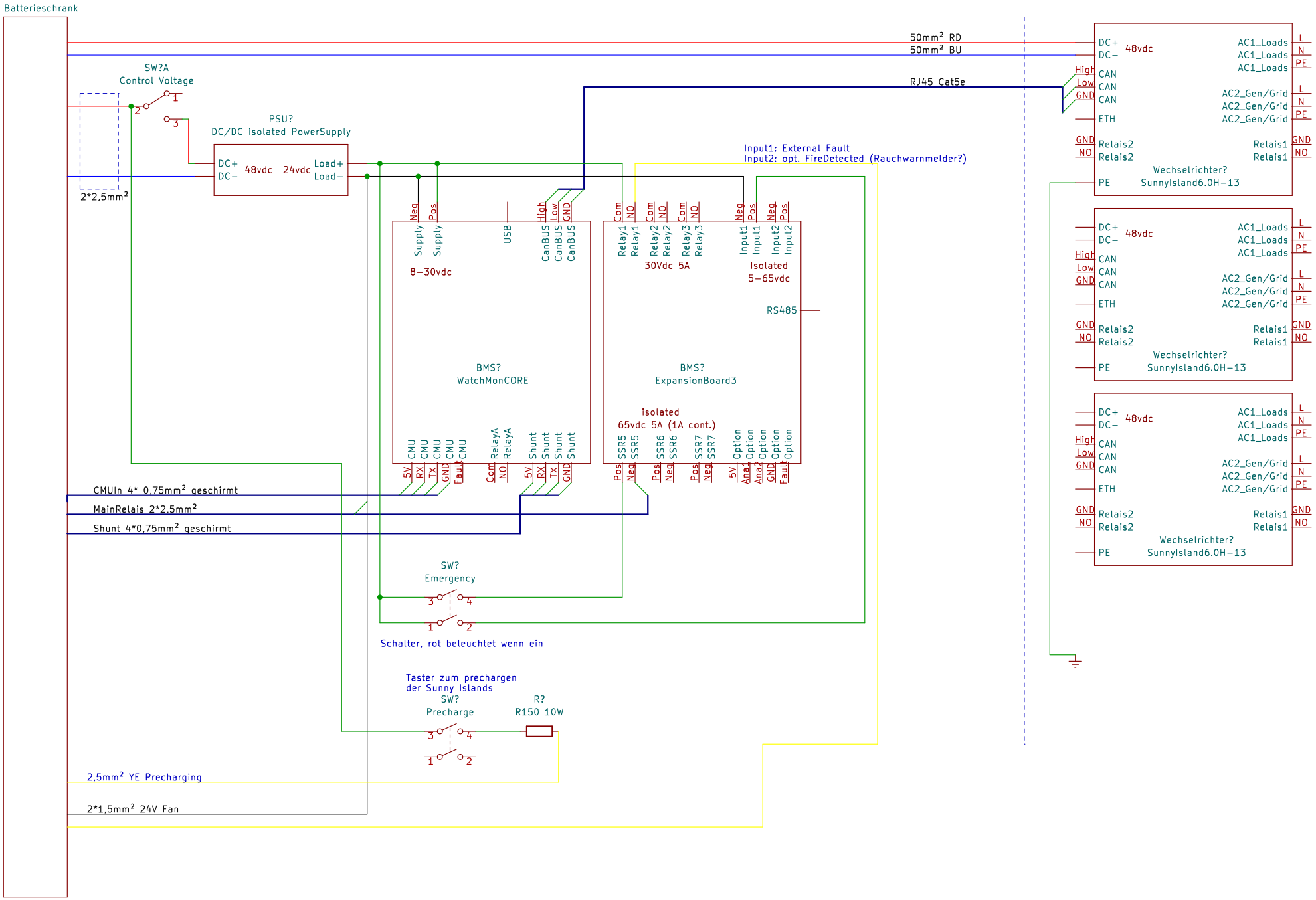

Datei: Batterieschrank.kicad_sch

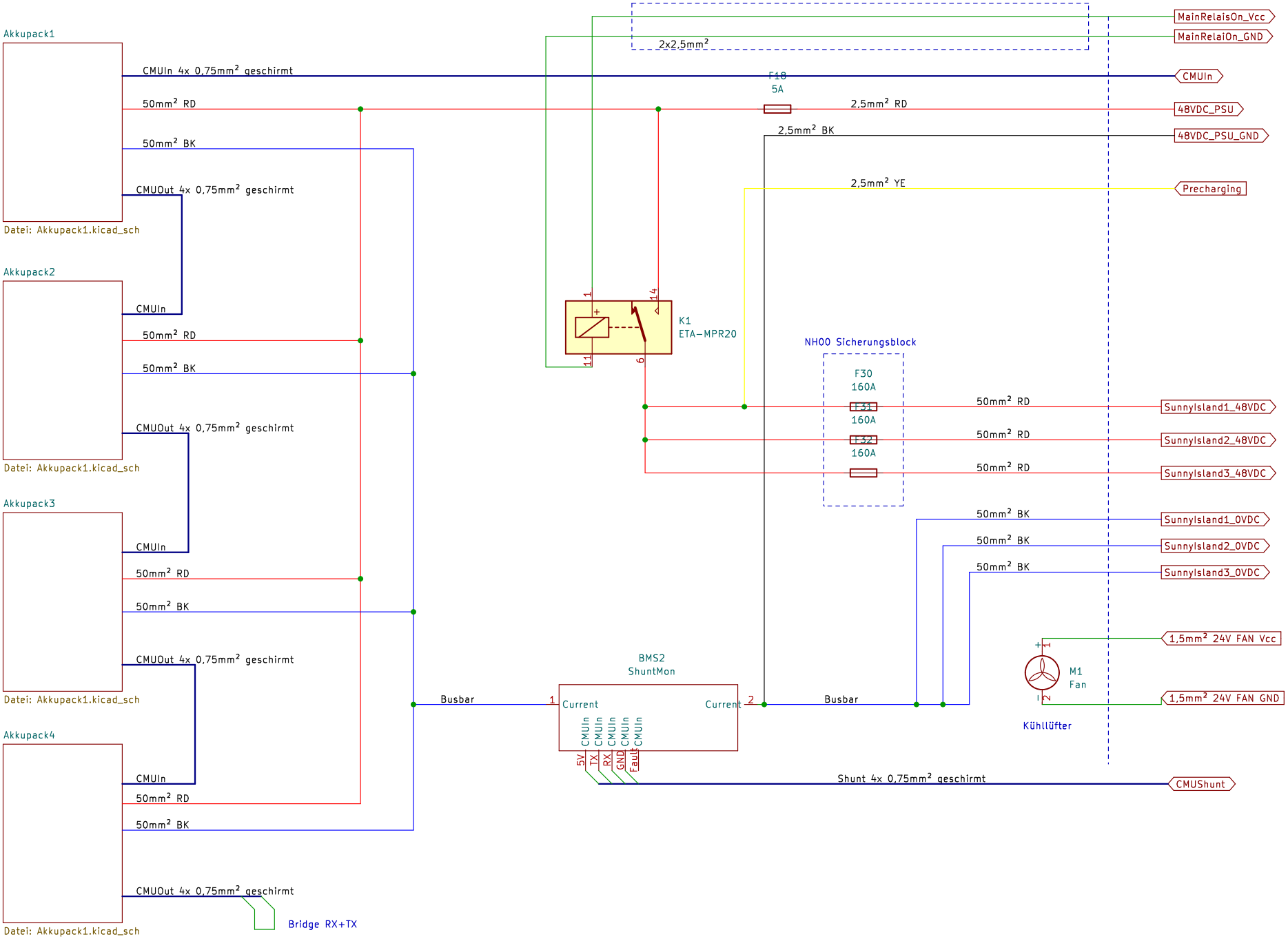
Akkupack1
CMUIn 4x 0,75mm² geschirmt
50mm² RD
50mm² BK
CMUOut 4x 0,75mm² geschirmt
Datei: Akkupack1.kicad_sch
Akkupack2
CMUIn
50mm² RD
50mm² BK
CMUOut 4x 0,75mm² geschirmt
Datei: Akkupack1.kicad_sch
Akkupack3
CMUIn
50mm² RD
50mm² BK
CMUOut 4x 0,75mm² geschirmt
Datei: Akkupack1.kicad_sch
Akkupack4
CMUIn
50mm² RD
50mm² BK
CMUOut 4x 0,75mm² geschirmt
Datei: Akkupack1.kicad_sch
Bridge RX+TX
2x2,5mm²
MainRelaisOn_Vcc
MainRelaiOn_GND
CMUIn
F18
5A
2,5mm² RD
48VDC_PSU
2,5mm² BK
48VDC_PSU_GND
2,5mm² YE
Precharging
K1
ETA-MPR20
NH00 Sicherungsblock
F30
160A
F31
160A
F32
160A
50mm² RD
SunnyIsland1_48VDC
SunnyIsland2_48VDC
SunnyIsland3_48VDC
50mm² BK
SunnyIsland1_0VDC
SunnyIsland2_0VDC
SunnyIsland3_0VDC
1,5mm² 24V FAN Vcc
1,5mm² 24V FAN GND
M1
Fan
Kühllüfter
BMS2
ShuntMon
Busbar
Current
Current
CMUIn
5V
TX
RX
GND
Fault
Shunt 4x 0,75mm² geschirmt
CMUShunt

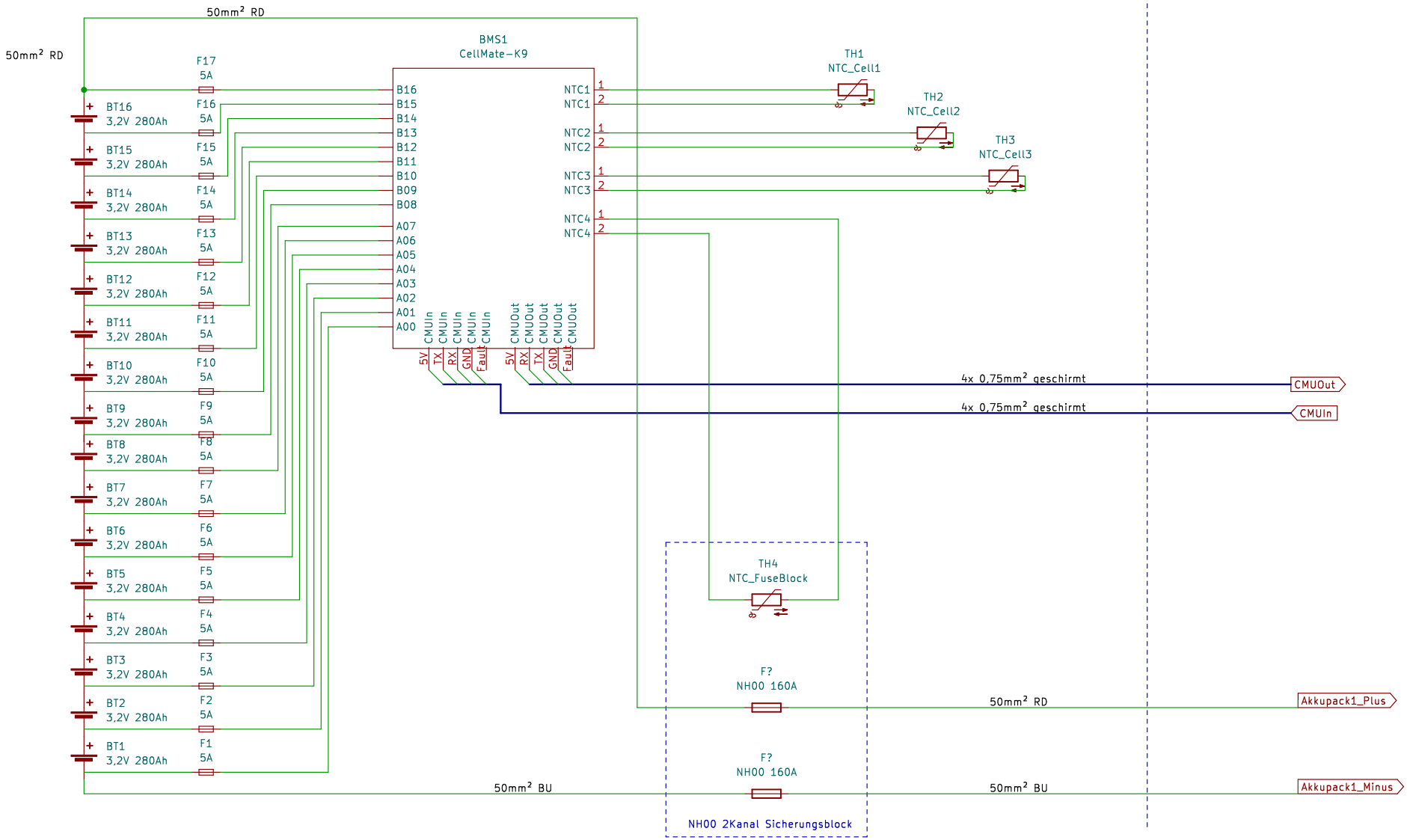
50mm² RD
50mm² RD
BMS1
CellMate-K9
B16
B15
B14
B13
B12
B11
B10
B09
B08
A07
A06
A05
A04
A03
A02
A01
A00
NTC1
NTC1
NTC2
NTC2
NTC3
NTC3
NTC4
NTC4
5V
TX
RX
GND
Fault
CMUIn
CMUIn
CMUIn
CMUIn
CMUIn
5V
RX
TX
GND
Fault
CMUOut
CMUOut
CMUOut
CMUOut
CMUOut
TH1
NTC_Cell1
TH2
NTC_Cell2
TH3
NTC_Cell3
F17
5A
F16
5A
F15
5A
F14
5A
F13
5A
F12
5A
F11
5A
F10
5A
F9
5A
F8
5A
F7
5A
F6
5A
F5
5A
F4
5A
F3
5A
F2
5A
F1
5A
BT16
3,2V 280Ah
BT15
3,2V 280Ah
BT14
3,2V 280Ah
BT13
3,2V 280Ah
BT12
3,2V 280Ah
BT11
3,2V 280Ah
BT10
3,2V 280Ah
BT9
3,2V 280Ah
BT8
3,2V 280Ah
BT7
3,2V 280Ah
BT6
3,2V 280Ah
BT5
3,2V 280Ah
BT4
3,2V 280Ah
BT3
3,2V 280Ah
BT2
3,2V 280Ah
BT1
3,2V 280Ah
4x 0,75mm² geschirmt
CMUOut
4x 0,75mm² geschirmt
CMUIn
TH4
NTC_FuseBlock
F?
NH00 160A
50mm² RD
Akkupack1_Plus
F?
NH00 160A
50mm² BU
50mm² BU
Akkupack1_Minus
NH00 2Kanal Sicherungsblock

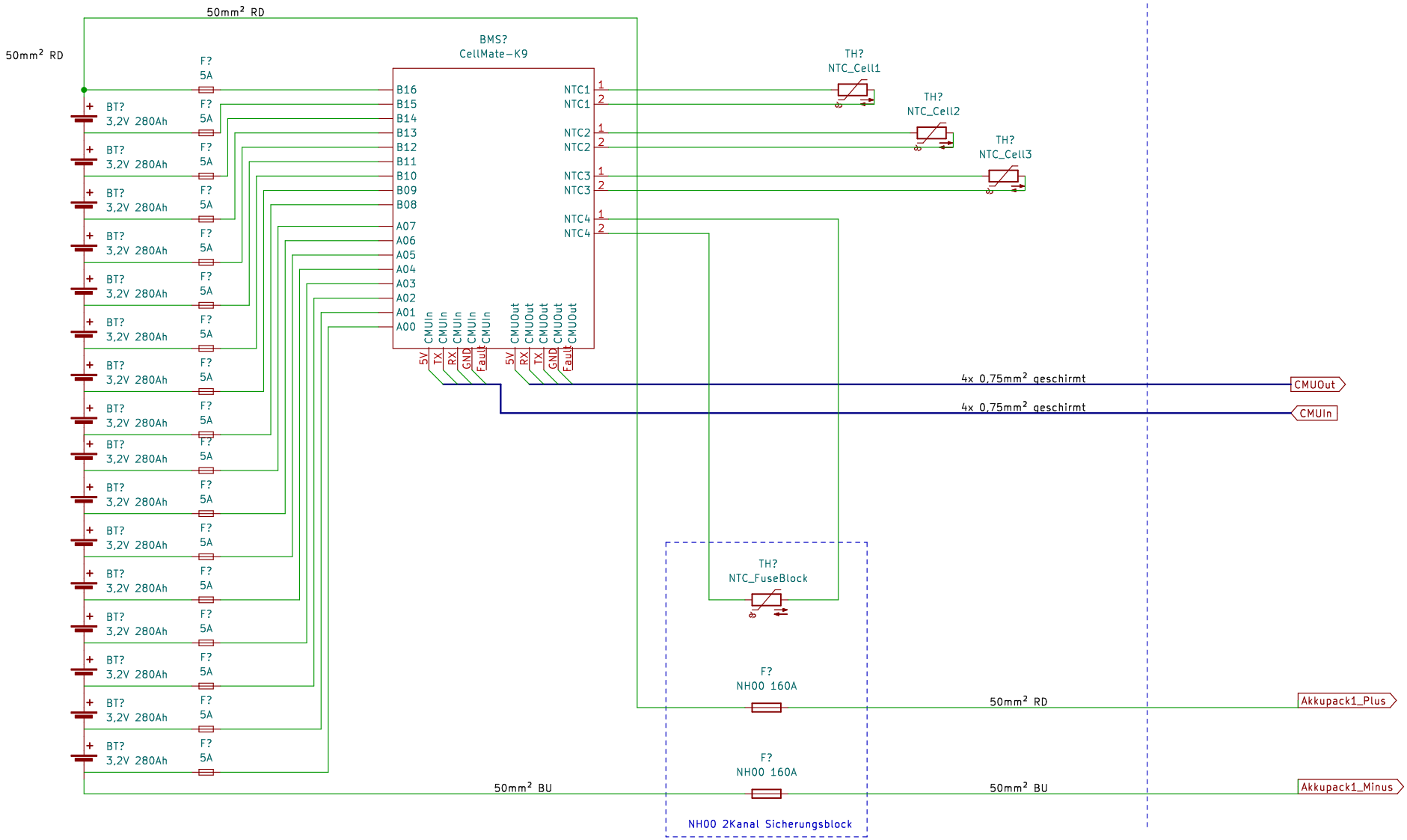
50mm² RD
50mm² RD
BMS?
CellMate-K9
B16
B15
B14
B13
B12
B11
B10
B09
B08
A07
A06
A05
A04
A03
A02
A01
A00
NTC1
NTC1
NTC2
NTC2
NTC3
NTC3
NTC4
NTC4
5V
TX
RX
GND
Fault
CMUIn
CMUIn
CMUIn
CMUIn
CMUIn
5V
RX
TX
GND
Fault
CMUOut
CMUOut
CMUOut
CMUOut
CMUOut
TH?
NTC_Cell1
TH?
NTC_Cell2
TH?
NTC_Cell3
F?
5A
BT?
3,2V 280Ah
4x 0,75mm² geschirmt
CMUOut
4x 0,75mm² geschirmt
CMUIn
TH?
NTC_FuseBlock
F?
NH00 160A
50mm² RD
Akkupack1_Plus
F?
NH00 160A
50mm² BU
50mm² BU
Akkupack1_Minus
NH00 2Kanal Sicherungsblock

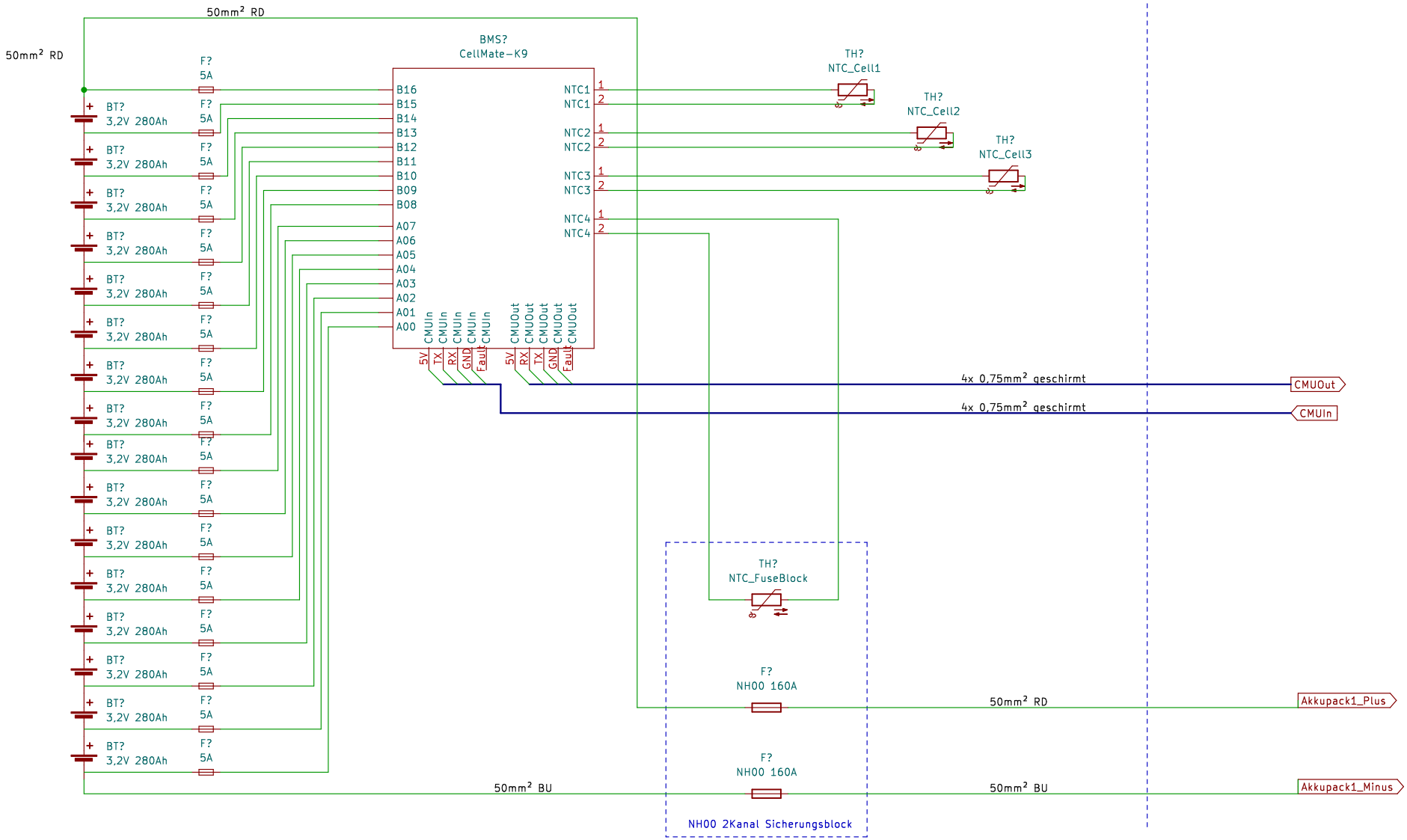
50mm² RD
50mm² RD
BMS?
CellMate-K9
B16
B15
B14
B13
B12
B11
B10
B09
B08
A07
A06
A05
A04
A03
A02
A01
A00
NTC1
NTC1
NTC2
NTC2
NTC3
NTC3
NTC4
NTC4
5V
TX
RX
GND
Fault
CMUIn
CMUIn
CMUIn
CMUIn
CMUIn
5V
RX
TX
GND
Fault
CMUOut
CMUOut
CMUOut
CMUOut
CMUOut
TH?
NTC_Cell1
TH?
NTC_Cell2
TH?
NTC_Cell3
F?
5A
BT?
3,2V 280Ah
4x 0,75mm² geschirmt
CMUOut
4x 0,75mm² geschirmt
CMUIn
TH?
NTC_FuseBlock
F?
NH00 160A
50mm² RD
Akkupack1_Plus
F?
NH00 160A
50mm² BU
50mm² BU
Akkupack1_Minus
NH00 2Kanal Sicherungsblock

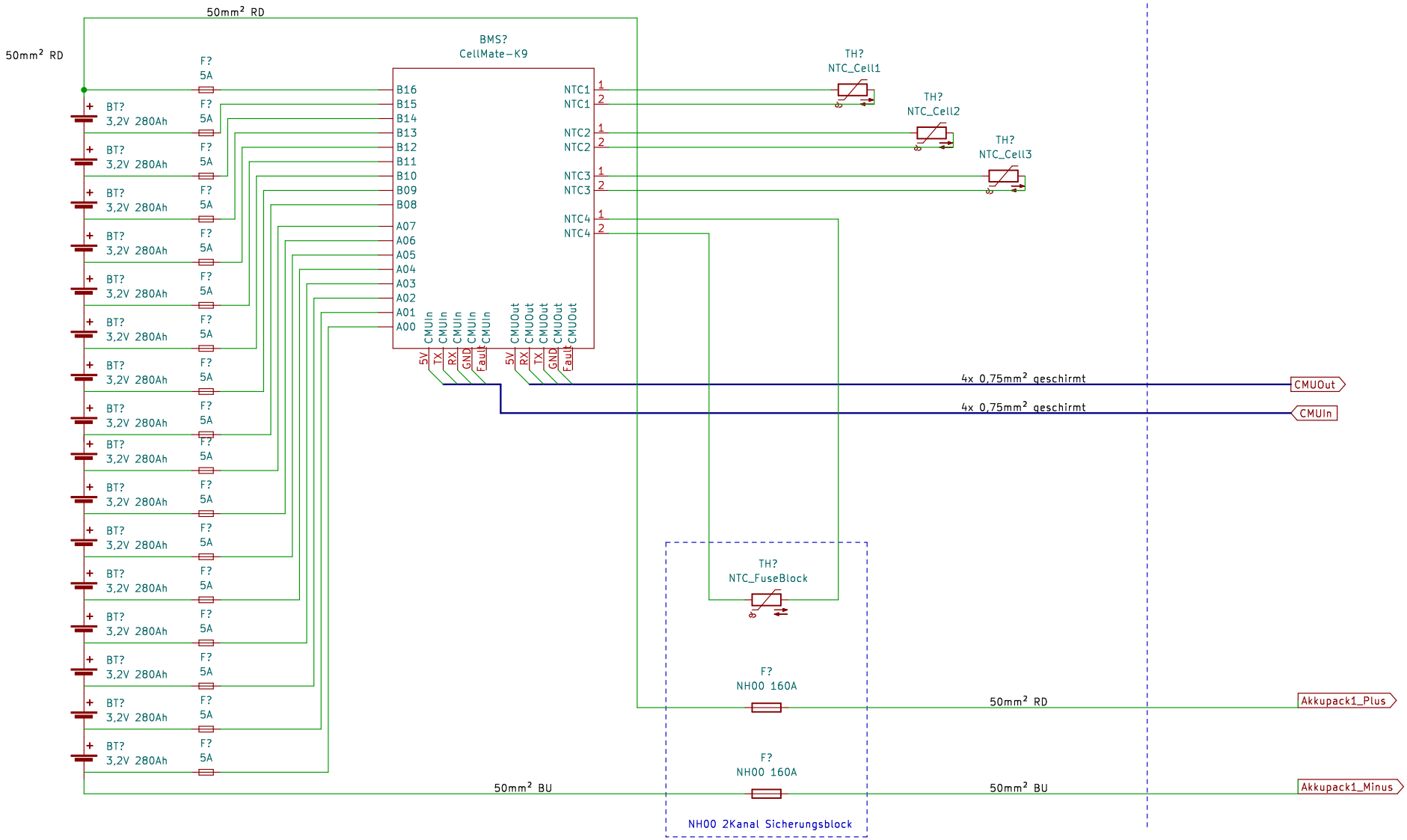
50mm² RD
50mm² RD
BMS?
CellMate-K9
B16
B15
B14
B13
B12
B11
B10
B09
B08
A07
A06
A05
A04
A03
A02
A01
A00
NTC1
NTC1
NTC2
NTC2
NTC3
NTC3
NTC4
NTC4
5V
TX
RX
GND
Fault
CMUIn
CMUIn
CMUIn
CMUIn
CMUIn
5V
RX
TX
GND
Fault
CMUOut
CMUOut
CMUOut
CMUOut
CMUOut
TH?
NTC_Cell1
TH?
NTC_Cell2
TH?
NTC_Cell3
F?
5A
BT?
3,2V 280Ah
4x 0,75mm² geschirmt
CMUOut
4x 0,75mm² geschirmt
CMUIn
TH?
NTC_FuseBlock
F?
NH00 160A
50mm² RD
Akkupack1_Plus
F?
NH00 160A
50mm² BU
50mm² BU
Akkupack1_Minus
NH00 2Kanal Sicherungsblock