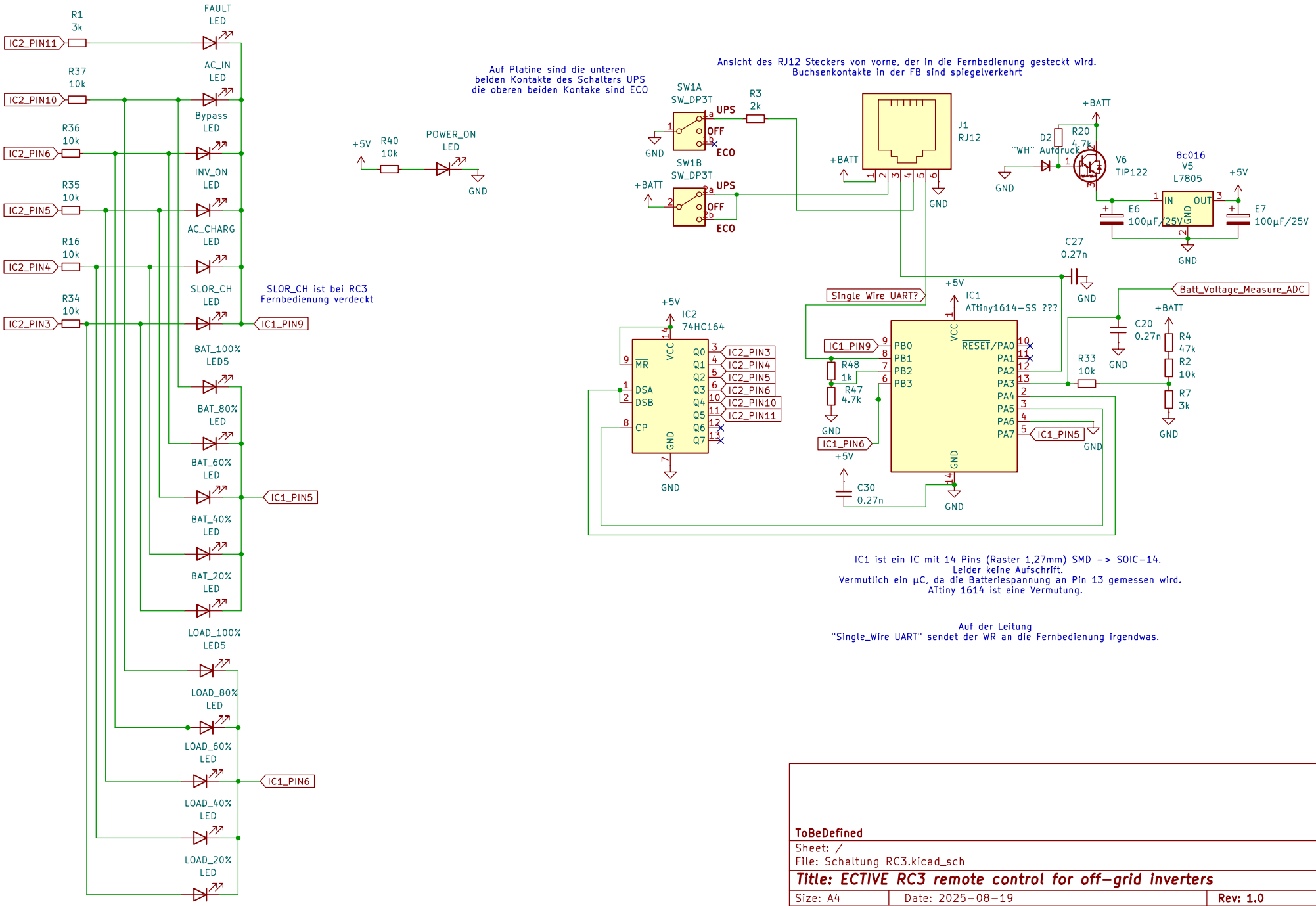

ToBeDefined

Sheet: /
File: Schaltung RC3.kicad_sch

Title: ECTIVE RC3 remote control for off-grid inverters

Size: A4	Date: 2025-08-19	**Rev: 1.0**
KiCad E.D.A. 8.0.6		Id: 1/1