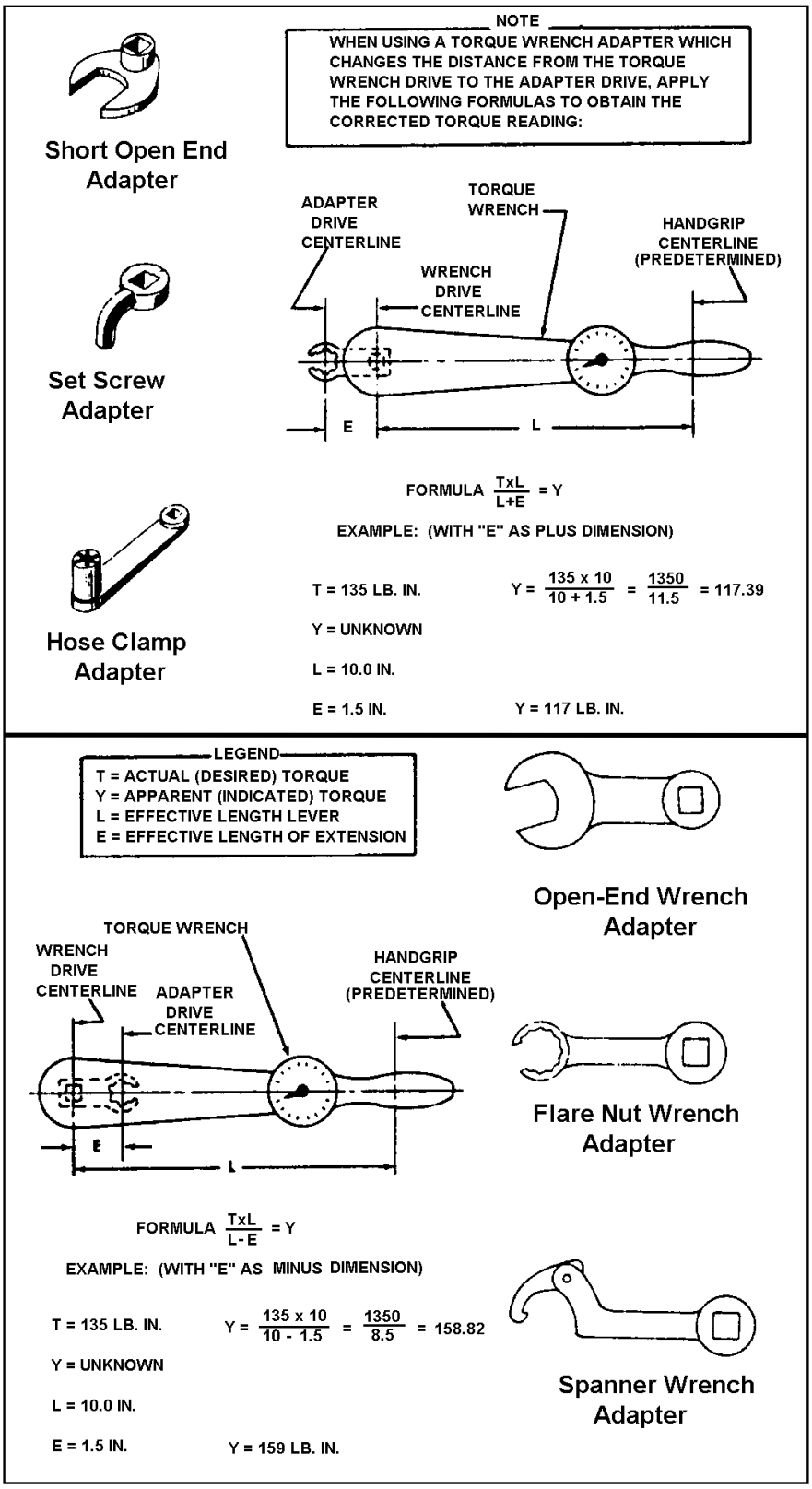

FIGURE 7-2. Torque wrench with various adapters.